Installation Manual

- NEW HARDWARE STORAGE
- ALL SHOWER BOOTH INC.

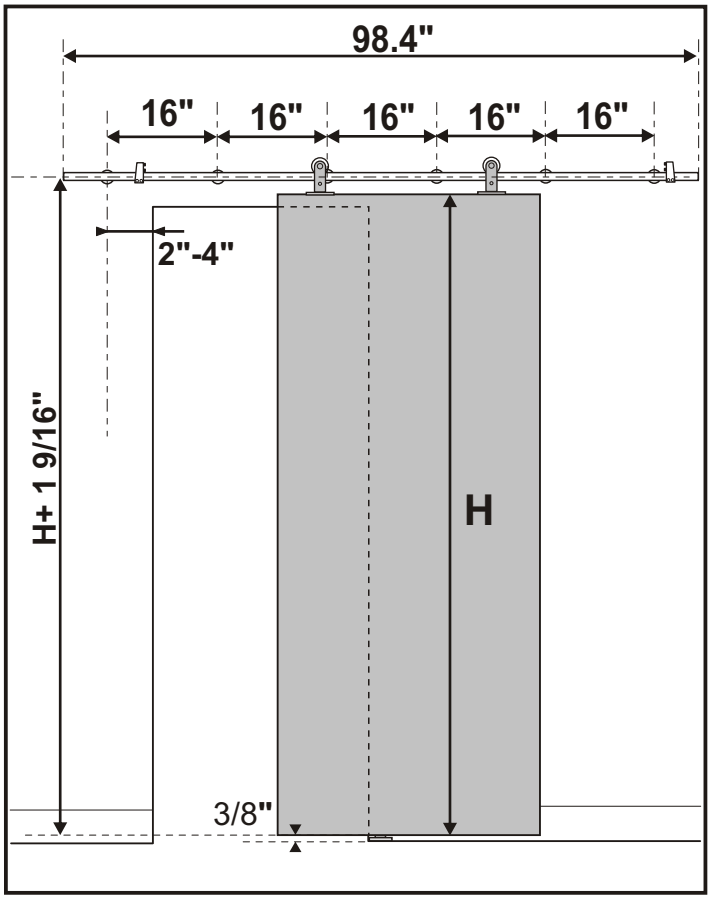

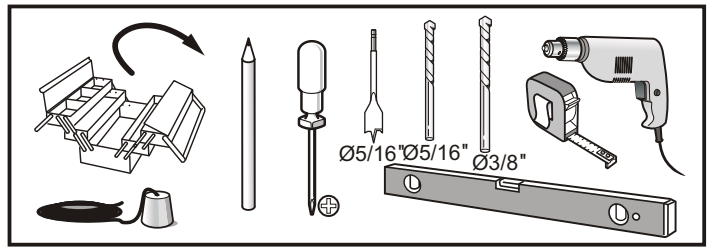

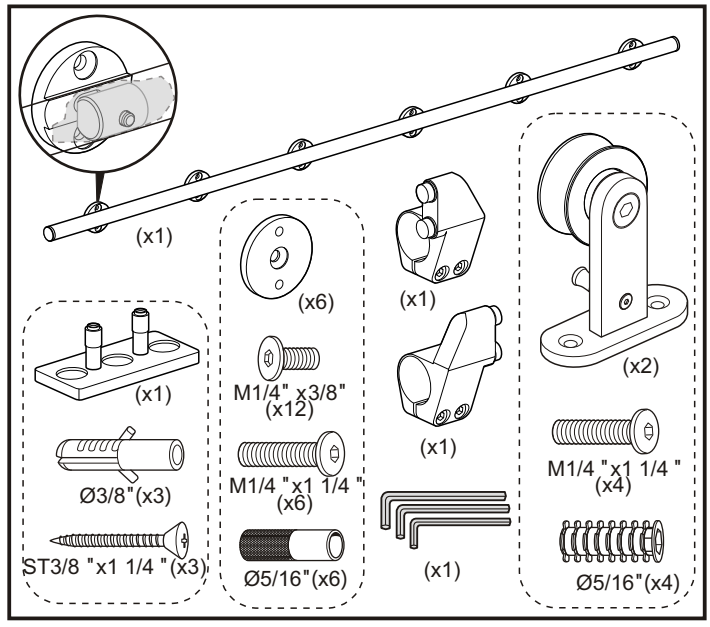

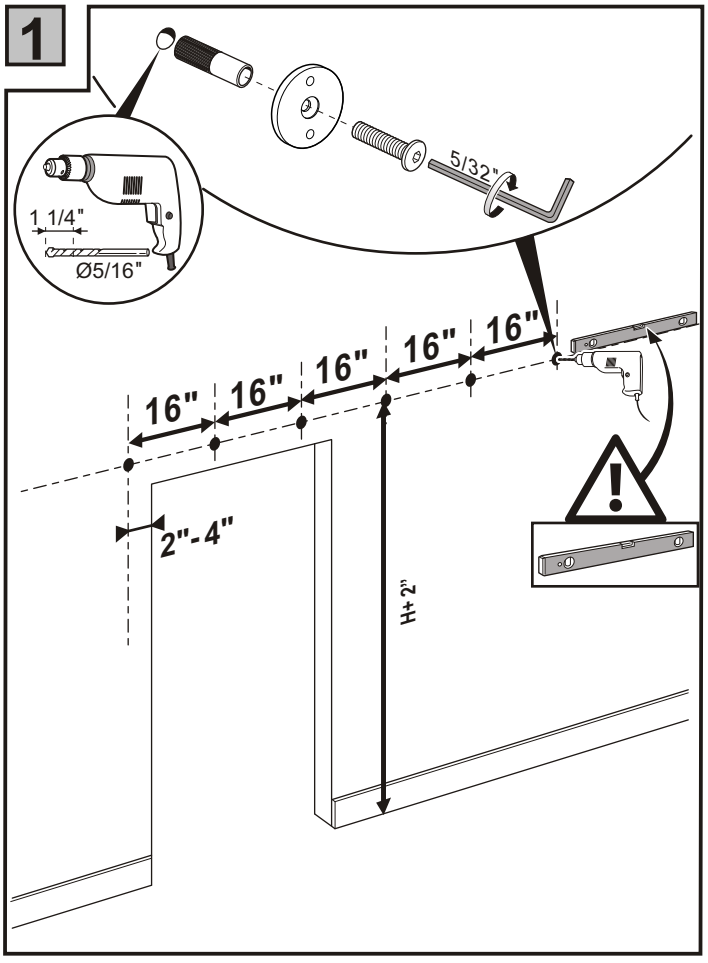

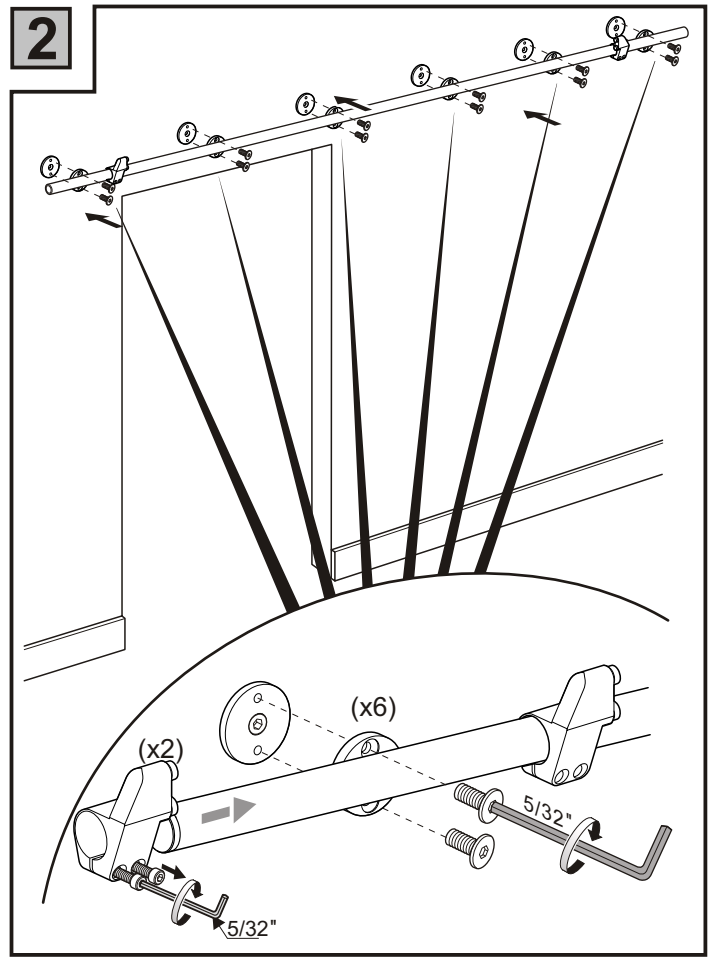

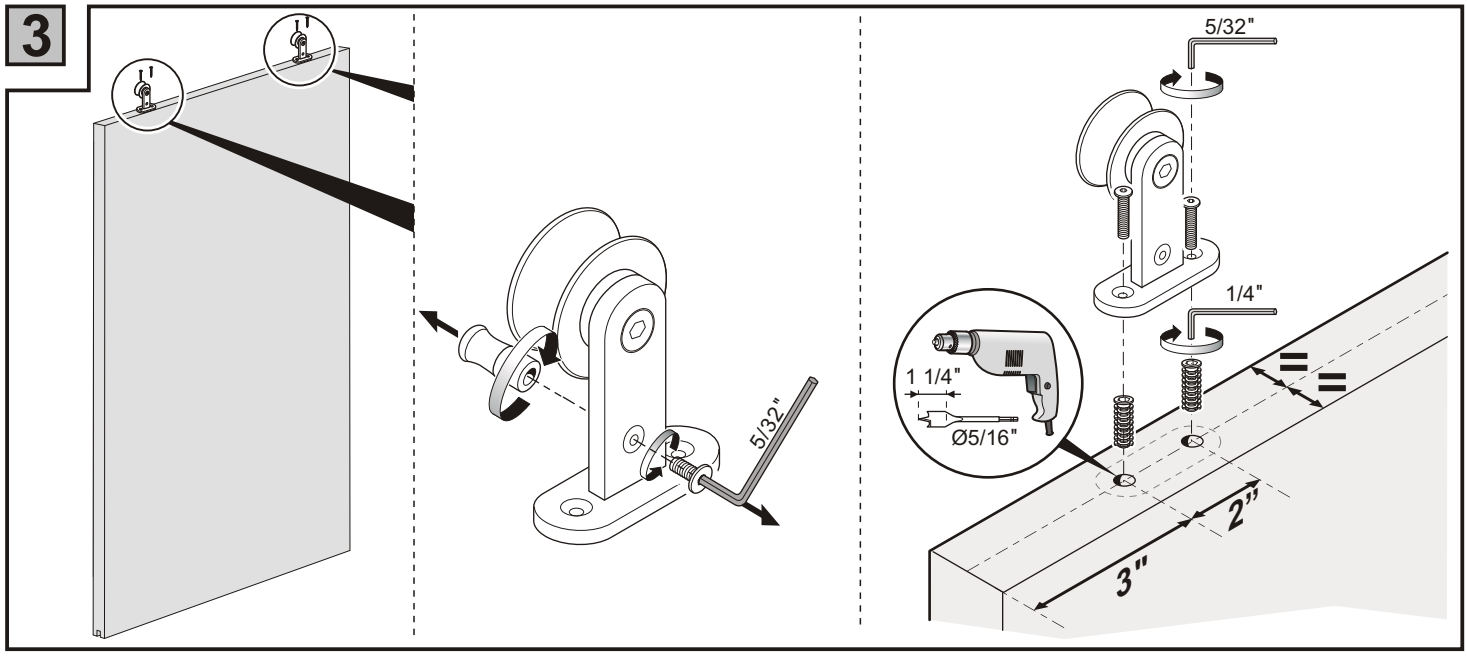
3
5/32"
1/4"
1 1/4"
Ø5/16"
2"
3"

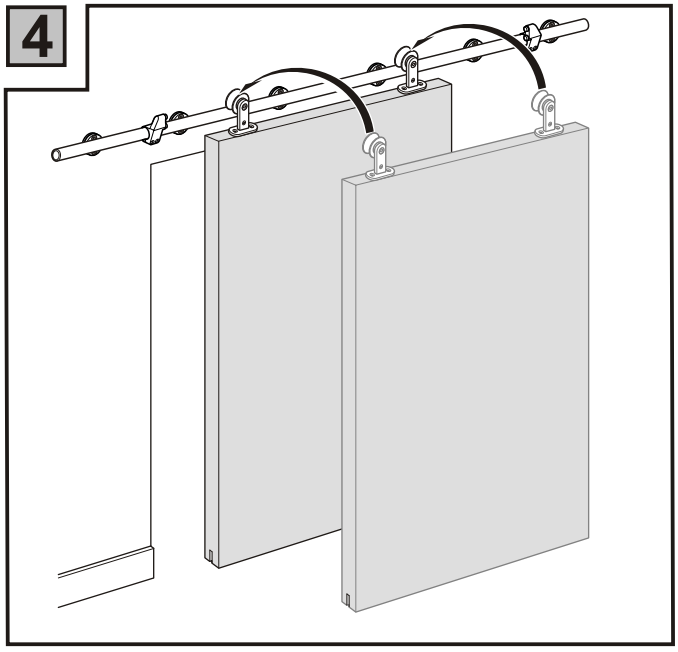
4

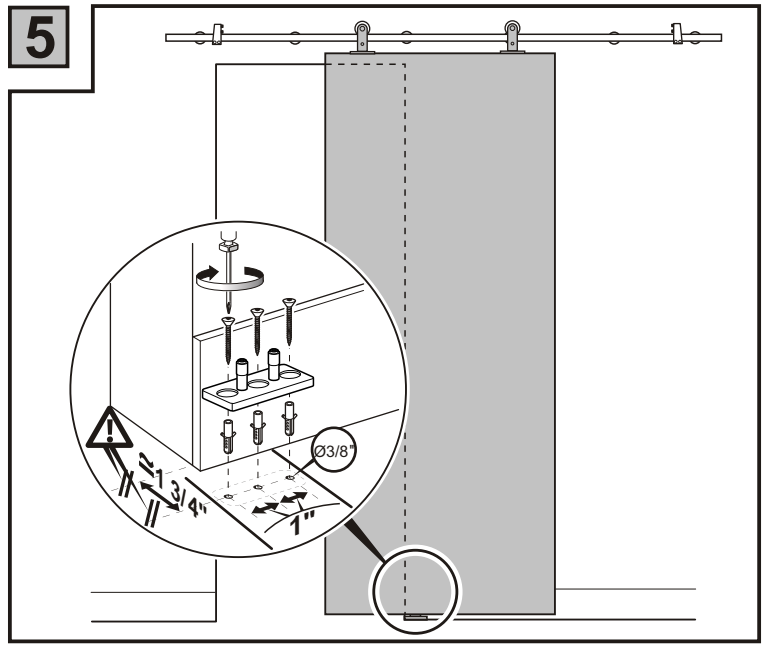
5
Ø3/8"
1 3/4"
1"

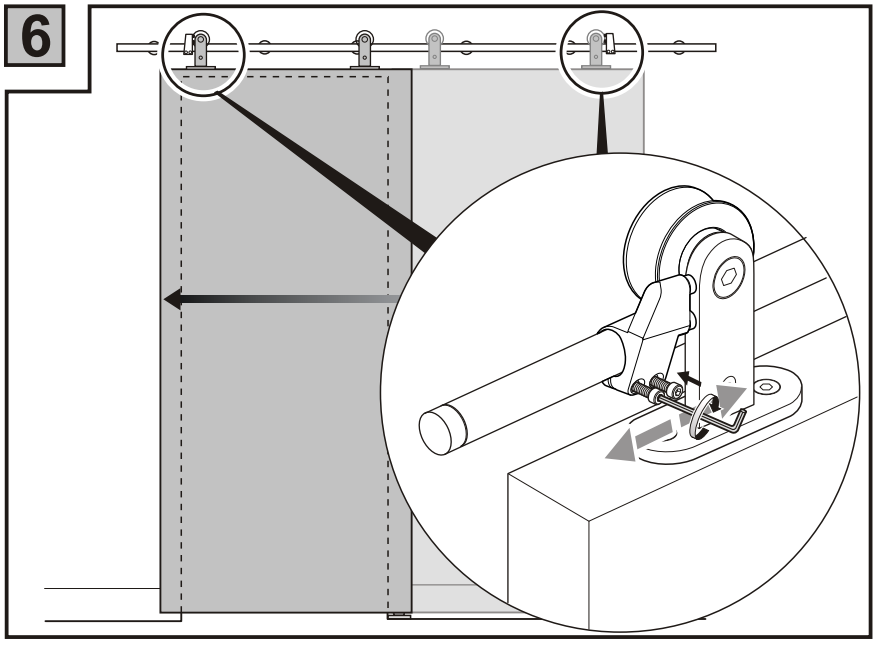
6

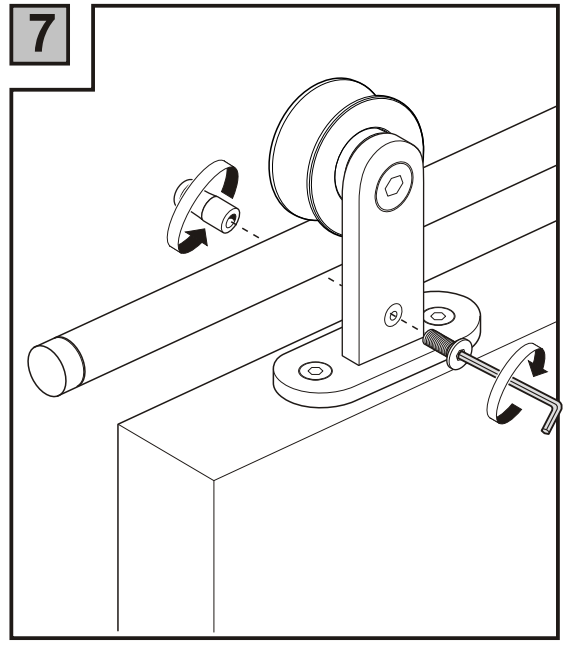
7