Installation Manual

- NEW HARDWARE STORAGE
- ALL SHOWER BOOTH INC.

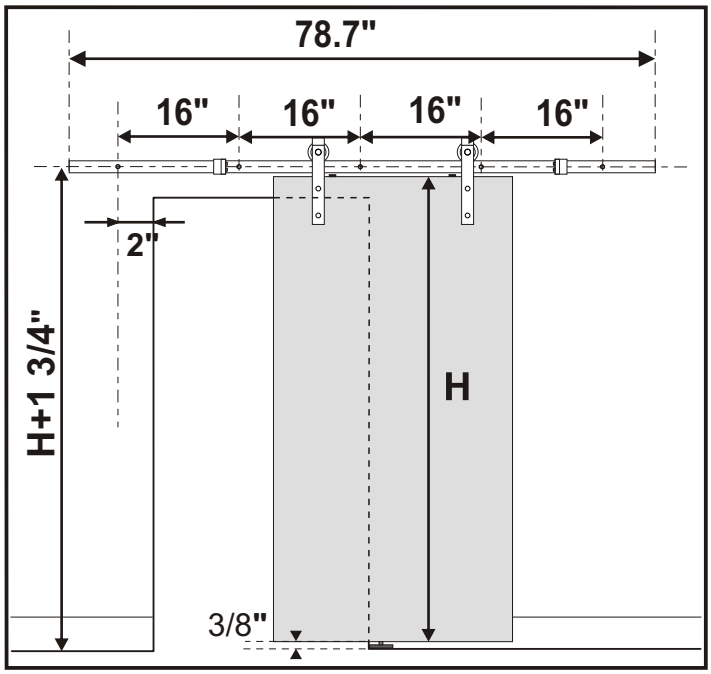

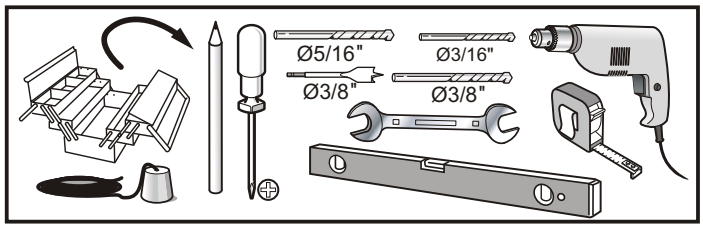

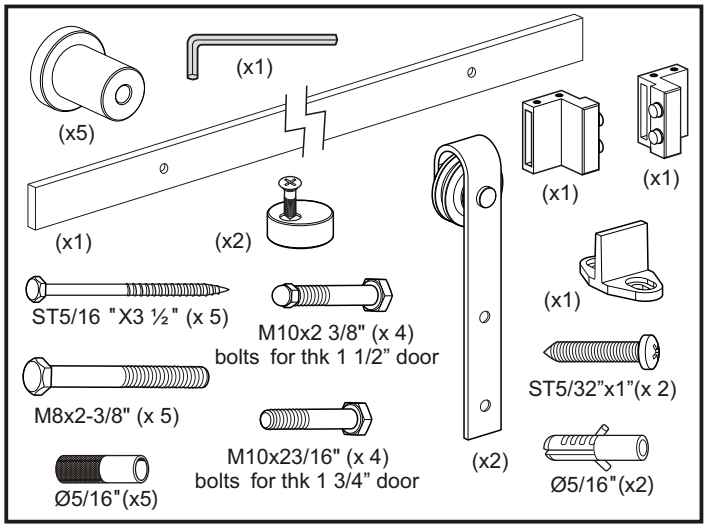

1

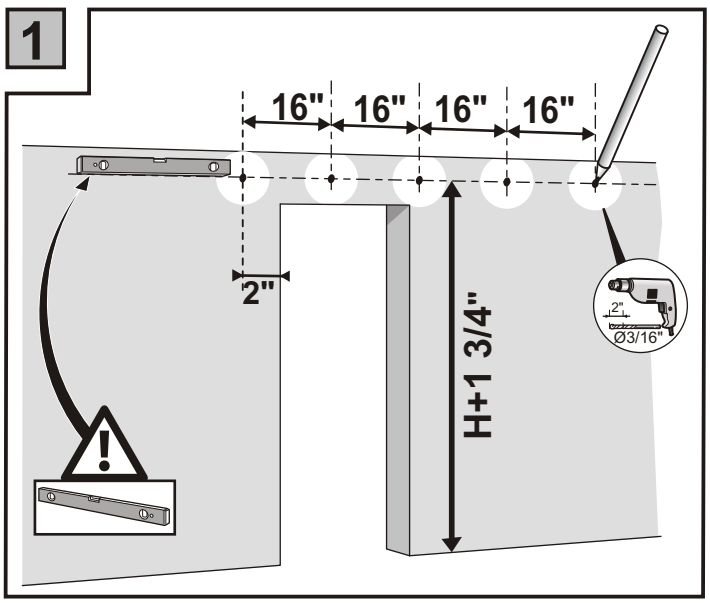

3

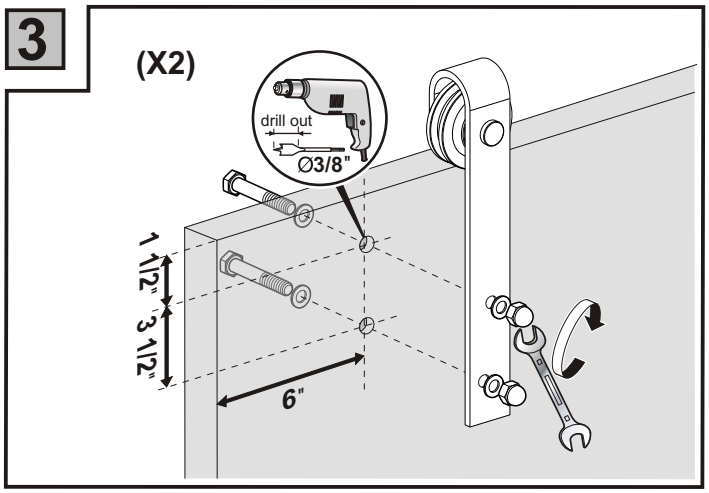

2

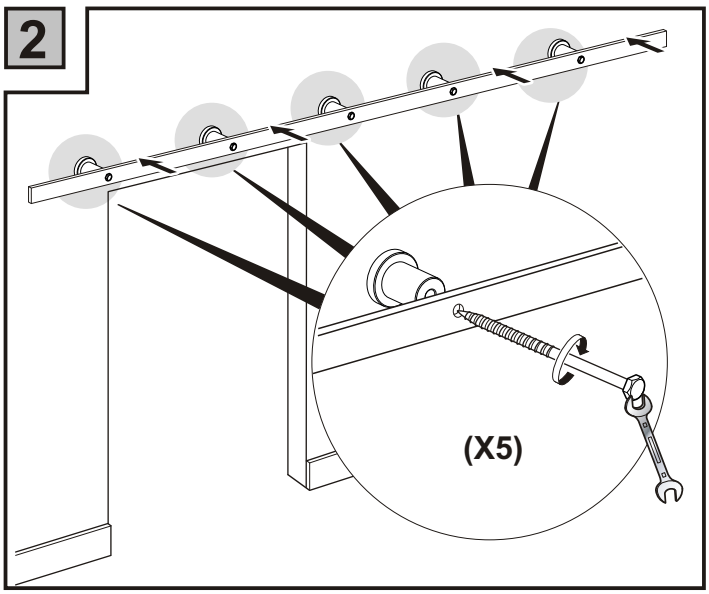

4

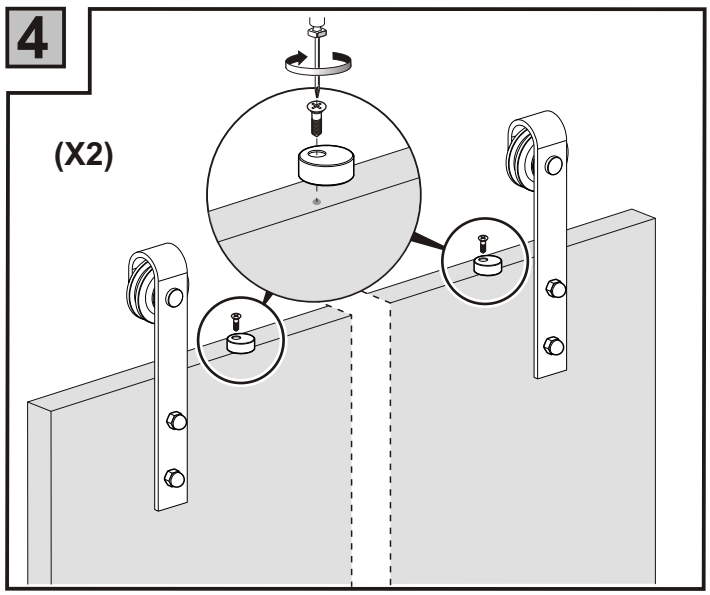

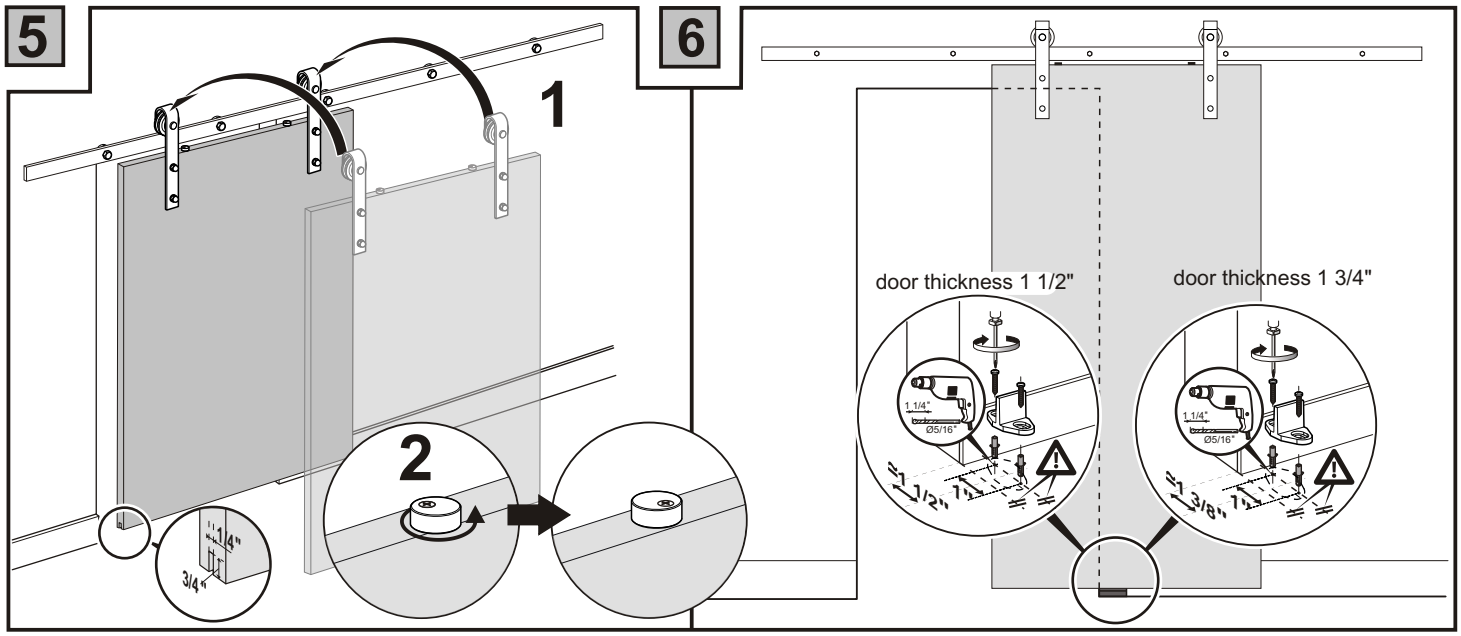
5
1
2
1 1/4"
3/4"
6
door thickness 1 1/2"
door thickness 1 3/4"
1 1/4"
Ø5/16"
1 1/2"
1 3/8"

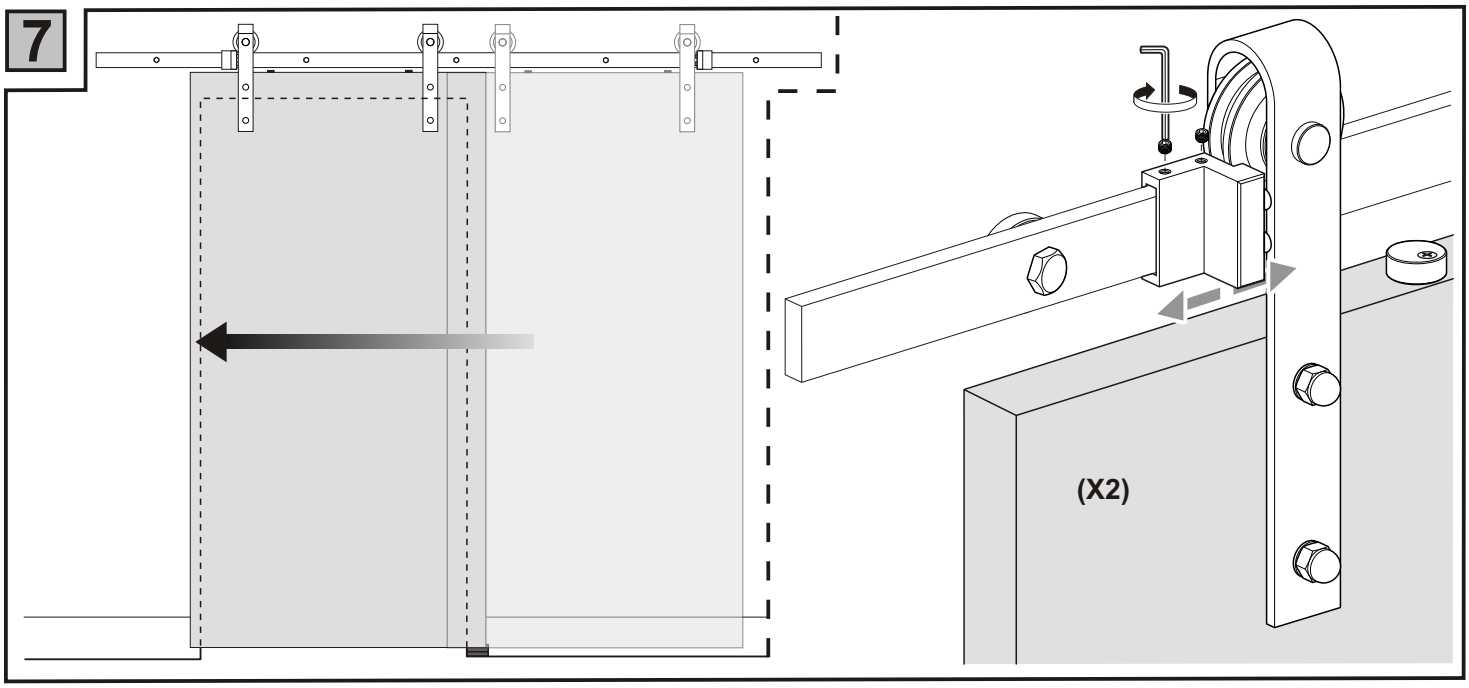
7
(X2)